rexroth
A Bosch Company

Solenoid operated valves pilot operated poppet type 2-way normally closed proximity sensor Special cavity, 021-E

VESP-16G-16A/00-2A-N7 OD.15.05.21.65 - Y - Z

RE 18325-05
Edition: 01.2016
Replaces: 07.2015

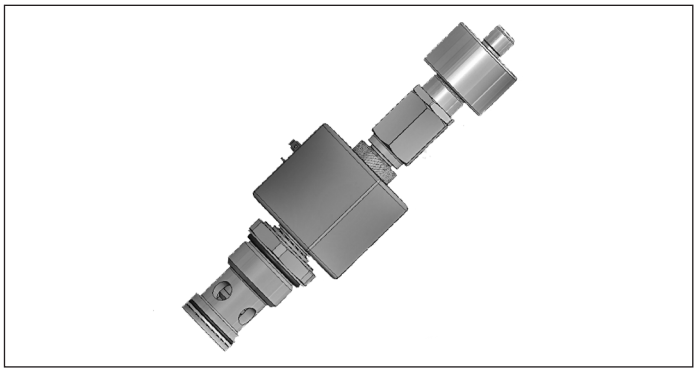

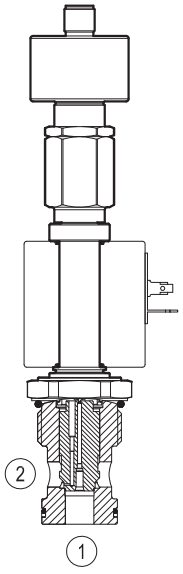

▼ **Version 04**

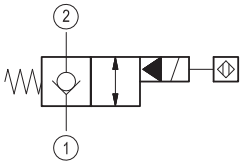

▼ **Version 84**

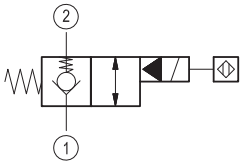

Technical data

General		
Weight		0.9 kg (2 lbs)
Installation orientation		Optional
Ambient temperature range		-25 to 60 °C (-13 to 140 °F)
Hydraulic		
Max. operating pressure		350 bar (5000 psi)
Flow range		5 - 150 l/min (1 - 40 gpm)
Max. internal leakage[1)]		20 drops/min.
Fluid temperature range		-20 to 80 °C (-4 to 176 °F)
Fluids: Mineral-based or synthetics with lubricating properties at viscosities of 15 to 380 mm^2/s (cSt)		
Installation torque		80 - 100 Nm (59 - 74 ft-lbs)
Recommended degree of fluid contamination		Nominal value max. 10 µm (NAS 8) ISO 4406 19/17/14
MTTFd		150 years see RE 18350-51
Special cavity		021-E see 18325-75
Lines bodies and standard assemblies		Please refer to section “Hydaulic integrated circuit” or consult factory
Seal kit	code material no.	RG21E201052010 R934003566
Other technical data		See data sheet 18350-50
Electrical		
Type of voltage		DC voltage
Coil type		S7 see 18325-90
Supply voltage		See data sheet 18325-90
Nominal voltage		± 10%
Power consumption		30 W
Duty cycle coil		100 % see 18325-90
Type of protection		See data sheet 18325-90

[1)] (cSt 46)

Please consider that a proper fuction of the valve is guaranteed only if the position of the monitor is not modified; each cartridge is provided of a torque confirmation mark, intended as anti-tampering device.

Sensor is protected against short circuit polarity inversion.

Ordering code

OD.15	05	21	65	Y	Z

Solenoid operated valves
pilot operated poppet type
2-way normally closed proximity sensor

Special cavity: 021-E

OB 12 V DC for Y=84

OC 24 V DC for Y=04 or 84

Note: please consult factory for different voltages.

04

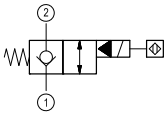

84

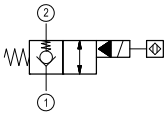

Type	Material number
OD1505216504OC	R934004627
OD1505216584OB	R934004630
OD1505216584OC	R934004628

Type	Material number

Characteristic curves

Version 04

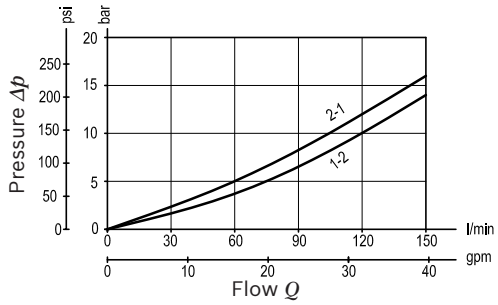

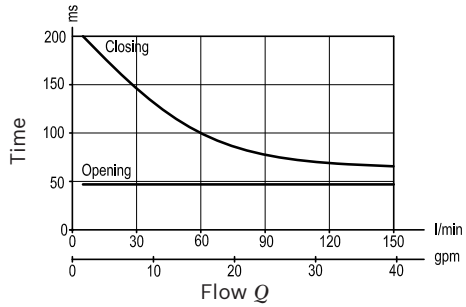

Version 84

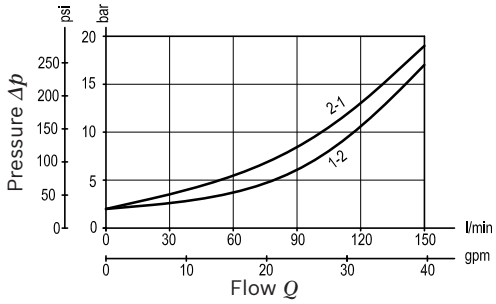

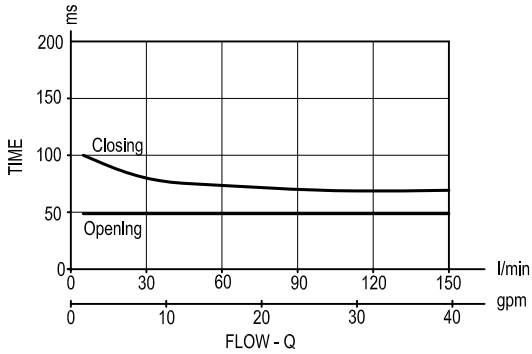

Sensor data:

	12 V DC	24 V DC
Supply voltage	10.5 to 16	20 to 32
Output load	≤ 400 mA	≤ 400 mA

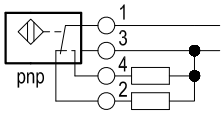

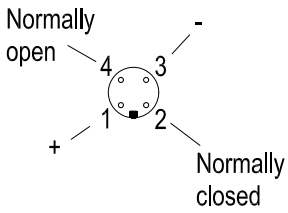

Dimensions

▼ **Version 04-84: Solenoid operated valve, poppet 2-way normally closed proximity sensor**

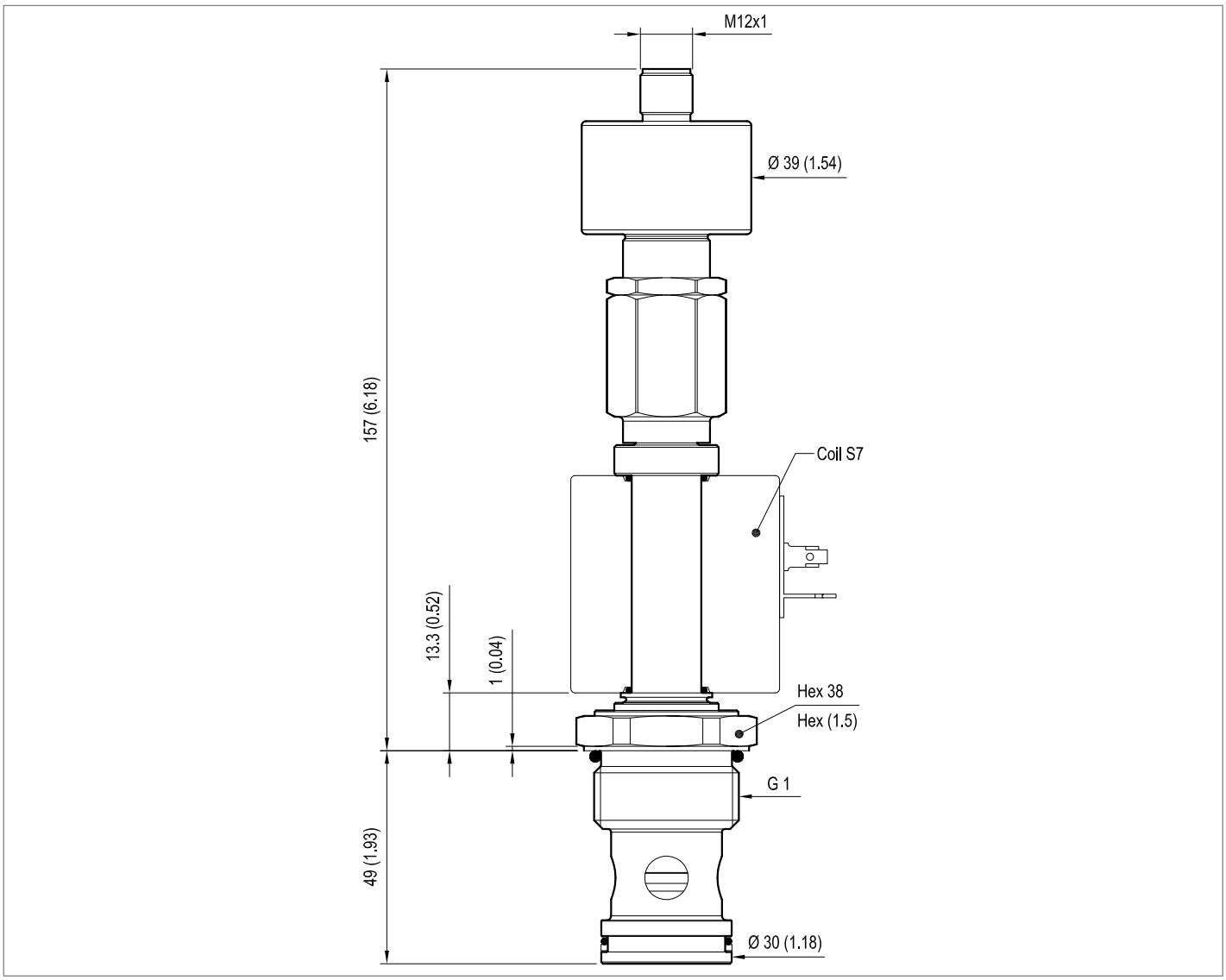

Bosch Rexroth Oil Control S.p.A.
Via Leonardo da Vinci 5
P.O. Box no. 5
41015 Nonantola – Modena, Italy
Tel. +39 059 887 611
Fax +39 059 547 848
compact-hydraulics-cv@boschrexroth.com
www.boschrexroth.com/compacthydraulics

© This document, as well as the data, specifications and other information set forth in it, are the exclusive property of Bosch Rexroth Oil Control S.p.a.. It may not be reproduced or given to third parties without its consent. The data specified above only serve to describe the product. No statements concerning a certain condition or suitability for a certain application can be derived from our information. The information given does not release the user from the obligation of own judgment and verification. It must be remembered that our products are subject to a natural process of wear and aging. Subject to change.